For Outdoor Unit

SANYO INSTALLATION INSTRUCTIONS

– Inverter Multi Split System Air Conditioner – COOL/DRY/HEAT Model

This air conditioner uses the new refrigerant R410A.

English | Español | Français | Deutsch | Italiano | Português | Ελληνικά

Contents

Page

IMPORTANT!
Please Read Before Starting **2**

1. GENERAL **3**
- 1-1. Tools Required for Installation (not supplied)
- 1-2. Accessories Supplied with Unit
- 1-3. Optional Copper Tubing Kit
- 1-4. Type of Copper Tube and Insulation Material
- 1-5. Additional Materials Required for Installation

2. INSTALLATION SITE SELECTION **4**
- 2-1. Indoor Unit
- 2-2. Connecting Indoor Units
- 2-3. Outdoor Unit
- 2-4. Outer Dimensions of Outdoor Unit
- 2-5. Diagram of Outdoor Unit Installation

3. INSTALLATION PROCESS **8**
- 3-1. Embedding the Tubing and Wiring
- 3-2. Drain Cap and Drain Elbow
- 3-3. Use of the Flaring Method
- 3-4. Flaring Procedure with a Flare Tool
- 3-5. Caution Before Connecting Tubes Tightly
- 3-6. Tubing Connections
- 3-7. Insulation of Refrigerant Tubing
- 3-8. Taping the Tubes
- 3-9. Finishing the Installation

4. AIR PURGING **11**
- ■ Air Purging with a Vacuum Pump (for Test Run)
- ■ Pump Down

5. WIRING INSTRUCTIONS **14**
- 5-1. General Precautions on Wiring
- 5-2. Recommended Wire Length and Diameter
- 5-3. Wiring System Diagram
- 5-4. How to Connect Wiring to the Terminal
- 5-5. Wiring Instructions for the Outdoor Unit

6. TEST RUN **18**

7. CONNECTING A HOME AUTOMATION DEVICE **19**

8. INSTALLATION CHECK SHEET **19**

9. ELECTRIC WIRING DIAGRAM **19**

Model Combinations

Combine indoor and outdoor units only as listed below.

Indoor Unit	Outdoor Unit
SAP-KMRV74EH	SAP-CMRV1426EH
SAP-KMRV94EH	
SAP-KMRV124EH	
SAP-KMRV76EH	
SAP-KMRV96EH	
SAP-KMRV126EH	
SAP-KRV96EHDS	
SAP-KRV126EHDS	

Combine indoor and outdoor units only as listed in the combination tables for 2-room outdoor unit as shown in its respective manual.

Power Source:

50 Hz, single-phase, 220 – 240 VAC

Be sure to read the yellow instruction sheet attached to the outdoor unit for models using the new refrigerant R410A.

Combination example

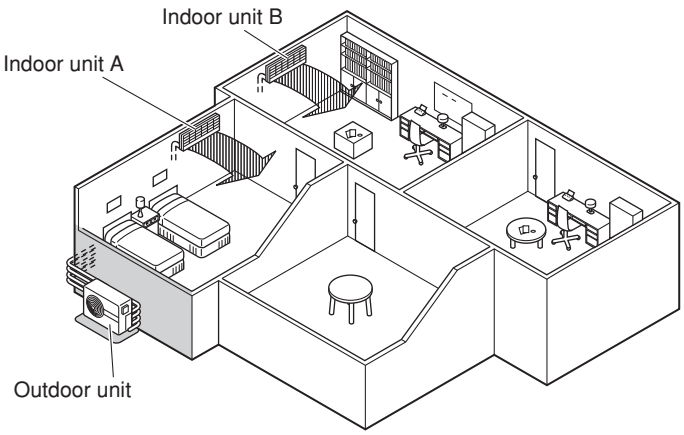

NOTE

The illustrations are based on the typical appearance of a standard model. Consequently, the shape may differ from that of the air conditioner that you are installing.

852641904560 01 © SANYO 2008

SANYO Electric Co., Ltd.
Osaka, Japan

English

IMPORTANT!
Please Read Before Starting

This air conditioning system meets strict safety and operating standards. As the installer or service person, it is an important part of your job to install or service the system so it operates safely and efficiently.

For safe installation and trouble-free operation, you must:

- Carefully read this instruction booklet before beginning.
- Follow each installation or repair step exactly as shown.
- Observe all local, state, and national electrical codes.
- Pay close attention to all warning and caution notices given in this manual.

WARNING

This symbol refers to a hazard or unsafe practice which can result in severe personal injury or death.

CAUTION

This symbol refers to a hazard or unsafe practice which can result in personal injury or product or property damage.

If Necessary, Get Help

These instructions are all you need for most installation sites and maintenance conditions. If you require help for a special problem, contact our sales/service outlet or your certified dealer for additional instructions.

In Case of Improper Installation

The manufacturer shall in no way be responsible for improper installation or maintenance service, including failure to follow the instructions in this document.

SPECIAL PRECAUTIONS

WARNING

When Wiring

ELECTRICAL SHOCK CAN CAUSE SEVERE PERSONAL INJURY OR DEATH. ONLY A QUALIFIED, EXPERIENCED ELECTRICIAN SHOULD ATTEMPT TO WIRE THIS SYSTEM.

- Do not supply power to the unit until all wiring and tubing are completed or reconnected and checked.
- Highly dangerous electrical voltages are used in this system. Carefully refer to the wiring diagram and these instructions when wiring. Improper connections and inadequate grounding can cause **accidental injury or death.**
- **Ground the unit** following local electrical codes.
- Connect all wiring tightly. Loose wiring may cause overheating at connection points and a possible fire hazard.
- Install a protective **leakage breaker** depending on the installation location (especially a damp or humid location). If a **leakage breaker** is not installed, electric shock can occur.

When Transporting

Be careful when picking up and moving the indoor and outdoor units. Get a partner to help, and bend your knees when lifting to reduce strain on your back. Sharp edges or thin aluminum fins on the air conditioner can cut your fingers.

When Installing…

…In a Ceiling or Wall

Make sure the ceiling/wall is strong enough to hold the unit's weight. It may be necessary to construct a strong wood or metal frame to provide added support.

…In a Room

Properly insulate any tubing run inside a room to prevent "sweating" that can cause dripping and water damage to walls and floors.

…In Moist or Uneven Locations

Use a raised concrete pad or concrete blocks to provide a solid, level foundation for the outdoor unit. This prevents water damage and abnormal vibration.

…In an Area with High Winds

Securely anchor the outdoor unit down with bolts and a metal frame. Provide a suitable air baffle.

…In a Snowy Area (for Heat Pump-type Systems)

- Position the outdoor unit in a protected location where snow will not blow into it.
- Install the outdoor unit on a raised platform that is higher than drifting snow. Provide snow vents.

When Connecting Refrigerant Tubing

- Use the flare method for connecting tubing.
- Apply refrigerant lubricant to the matching surfaces of the flare and union tubes before connecting them, then tighten the nut with a torque wrench for a leak-free connection.
- Check carefully for leaks before starting the test run.

When Servicing

- Turn the power OFF at the main power box (mains) before opening the unit to check or repair electrical parts and wiring.
- Keep your fingers and clothing away from any moving parts.
- Clean up the site after you finish, remembering to check that no metal scraps or bits of wiring have been left inside the unit being serviced.

CAUTION

Others

- Ventilate any enclosed areas when installing or testing the refrigeration system. Escaped refrigerant gas, on contact with fire or heat, can produce dangerously toxic gas.
- Confirm upon completing installation that no refrigerant gas is leaking. If escaped gas comes in contact with a stove, gas water heater, electric room heater or other heat source, it can produce dangerously toxic gas.
- Do not install only a single indoor unit.

1. General

This booklet briefly outlines where and how to install the air conditioning system. Please read over the entire set of instructions for the indoor and outdoor units and make sure all accessory parts listed are with the system before beginning. If the electric wiring diagram does not appear in this manual, please check for the diagram on the indoor unit.

1-1. Tools Required for Installation (not supplied)

1. Standard screwdriver
2. Phillips head screwdriver
3. Knife or wire stripper
4. Tape measure
5. Carpenter's level
6. Sabre saw or key hole saw
7. Hacksaw
8. Core bits
9. Hammer
10. Drill
11. Tube cutter
12. Tube flaring tool
13. Torque wrench
14. Adjustable wrench
15. Reamer (for deburring)
16. Vacuum pump (For R410A)
17. Manifold valve

English

1-2. Accessories Supplied with Unit

Table 1

Parts	Figure	Q'ty	Parts	Figure	Q'ty	Parts	Figure	Q'ty
Labels for inter-unit cable and tube	A B C D	4 each	Cushion rubber		4	Drain elbow		1
Drain cap		4						

Packed in the outdoor unit.

1-3. Optional Copper Tubing Kit

Copper tubing for connecting the outdoor unit to the indoor unit is available in kits which contain the narrow and wide tubing, fittings and insulation. Consult your nearest sales outlet or air conditioning workshop.

1-4. Type of Copper Tube and Insulation Material

If you wish to purchase these materials separately from a local source, you will need:

1. Deoxidized annealed copper tube for refrigerant tubing as detailed in Table 2.

   Cut each tube to the appropriate lengths +30 cm to 40 cm to dampen vibration between units.

2. Foamed polyethylene insulation for the specified copper tubes as required to precise length of tubing. Wall thickness of the insulation should be not less than 8 mm.

3. Use insulated copper wire for field wiring.
   Wire size varies with the total length of wiring.
   Refer to 5. Wiring Instructions for details.

CAUTION

Check local electrical codes and regulations before obtaining wire. Also, check any specified instructions or limitations.

Table 2

Model	Narrow Tube		Wide Tube	
	Outer Dia.	Thickness	Outer Dia.	Thickness
KMRV74/76	6.35 mm	0.8 mm	9.52 mm	0.8 mm
KMRV94/96	6.35 mm	0.8 mm	9.52 mm	0.8 mm
KMRV124/126	6.35 mm	0.8 mm	9.52 mm	0.8 mm
KRV96/126	6.35 mm	0.8 mm	9.52 mm	0.8 mm

English

1-5. Additional Materials Required for Installation

1. Refrigeration (armored) tape
2. Insulated staples or clamps for connecting wire (See local codes)
3. Putty
4. Refrigeration lubricant
5. Clamps or saddles to secure refrigerant tubing

2. Installation Site Selection

2-1. Indoor Unit

WARNING **To prevent abnormal heat generation and the possibility of fire, do not place obstacles, enclosures and grilles in front of or surrounding the air conditioner in a way that may block air flow.**

AVOID:

- direct sunlight.
- nearby heat sources that may affect performance of the unit.
- areas where leakage of flammable gas may be expected.
- placing or allowing any obstructions near the Air Conditioner inlet or outlet.
- installing in rooms that contain instant-on (rapid-start) fluorescent lamps. (These may prevent the Air Conditioner from receiving signals.)
- places where large amounts of oil mist exist.
- installing in locations where there are devices that generate high-frequency emissions.

DO:

- select an appropriate position from which every corner of the room can be uniformly cooled. (High on a wall is best.)
- select a location that will hold the weight of the unit.
- select a location where tubing and drain hose have the shortest run to the outside. (Fig. 1)
- allow room for operation and maintenance as well as unrestricted air flow around the unit. (Fig. 2)
- install the unit within the maximum elevation difference (H1, H2) above or below the outdoor unit and within a total tubing length (L1+L2) from the outdoor unit as detailed in Table 3 and Fig. 3a.

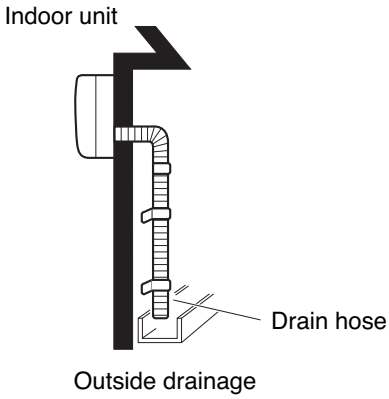

Fig. 1

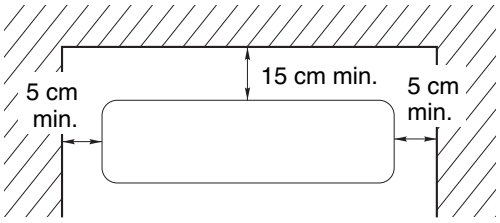

Front View

Fig. 2

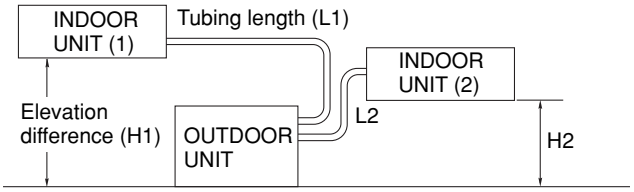

Fig. 3a

CAUTION

For stable operation of the air conditioner, do not install wall-mounted type indoor units less than 1.5 m from floor level.

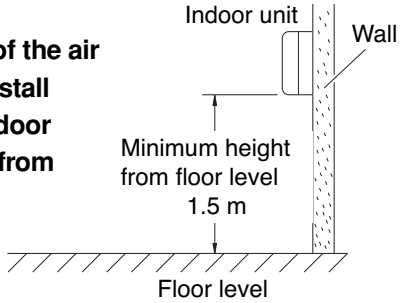

Fig. 3b

- install the indoor unit more than 1 meter away from any antenna or power lines or connecting wires used for television, radio, telephone, security system, or intercom. Electrical noise from any of these sources may affect operation.
- install in a sturdy manner to avoid increased operating noise.

English

Table 3

Model	Max. Allowable Tubing Length per unit (m)	Max. Allowable Total Tubing Length at Shipment (L1+L2) (m)	Limit of Total Tubing Length (L1+L2) (m)	Limit of Elevation Difference (H1, H2) (m)	Required Amount of Additional Refrigerant (g/m)*
CMRV1426	20	30 (L1+L2)	30 (L1+L2)	15	–

2-2. Connecting Indoor Units

(1) Connecting indoor unit for SAP-CMRV1426

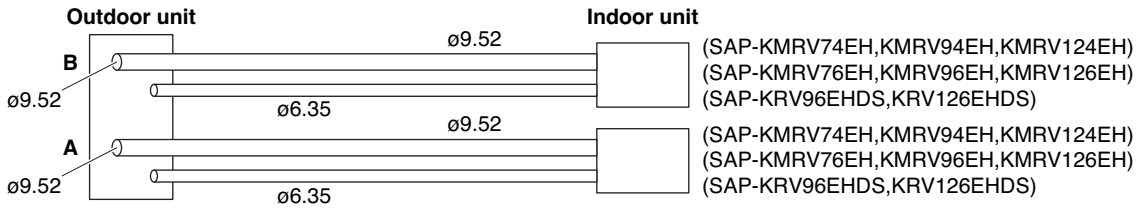

Fig. 4

unit: mm

English

2-3. Outdoor Unit

AVOID:

- heat sources, exhaust fans, etc. (Fig. 5a)
- damp, humid or uneven locations.

DO:

- position the outdoor unit in a protected location where snow will not blow into it.
- choose a place as cool as possible.
- choose a place that is well ventilated.
- install in a location where at least two sides are unobstructed, so that the flow of air at the intake port or exhaust port is not blocked, and so that sufficient space is ensured for maintenance to be carried out without trouble.
  In general the top also must be unobstructed. (Fig. 5b)
- provide a solid base (level concrete pad, concrete block, 10 × 40 cm beams or equal), a minimum of 10 cm above ground level to reduce humidity and protect the unit against possible water damage and decreased service life. (Fig. 5c)
- install cushion rubber under unit's feet to reduce vibration and noise. (Fig. 5d)
- use lug bolts or equal to bolt down unit, reducing vibration and noise.
- install in a location where no antenna of a television or radio exists within 3 meters.

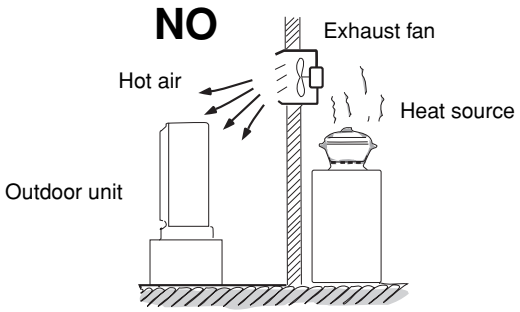

Fig. 5a

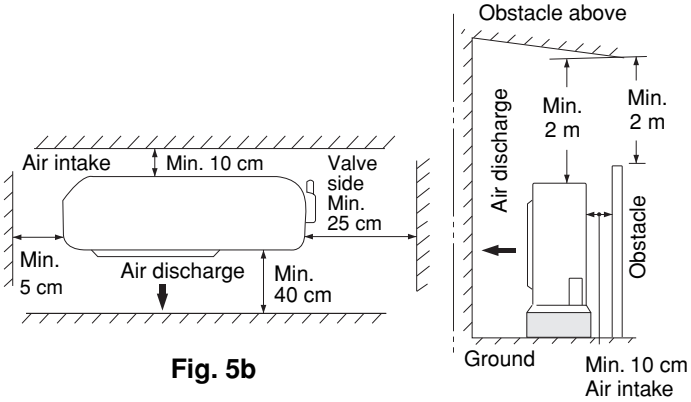

Fig. 5b

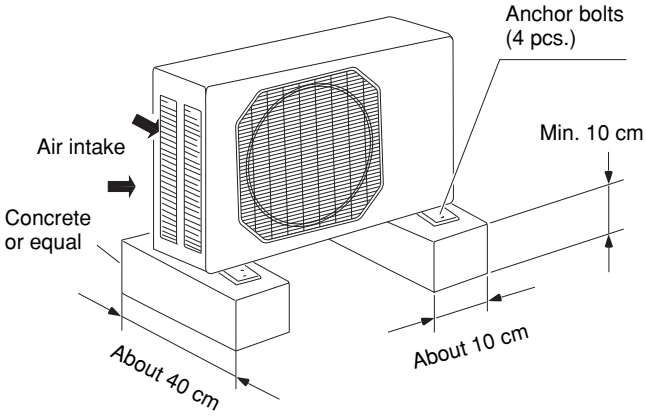

Fig. 5c

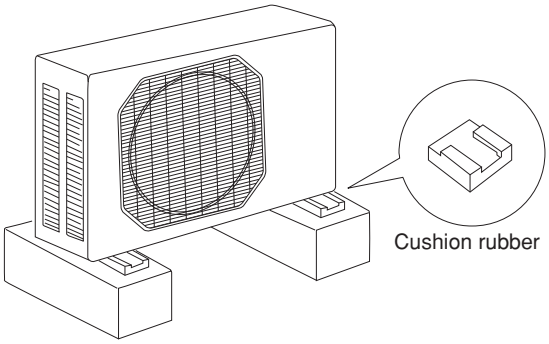

Fig. 5d

2-4. Outer Dimensions of Outdoor Unit

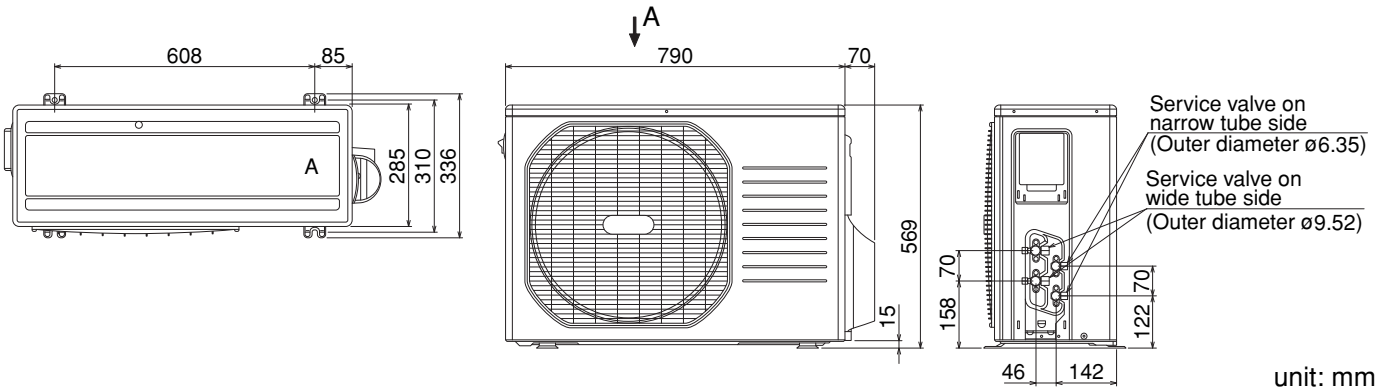

Fig. 6a

2-5. Diagram of Outdoor Unit Installation

Never install only a single indoor unit.

Be sure to connect indoor and outdoor units only in combinations that are listed in the catalog or in the combination table that was provided with the outdoor unit. (Use caution. Connecting any other model may result in operation failure and malfunction.)

The dimensions indicated by ⇔ in the figure below are spaces that are required in order to maintain performance. Install in a location where the dimensions indicated by ⇔ are ensured, and where 2 or more faces of the unit are unobstructed. In principle, the top direction should be unobstructed.

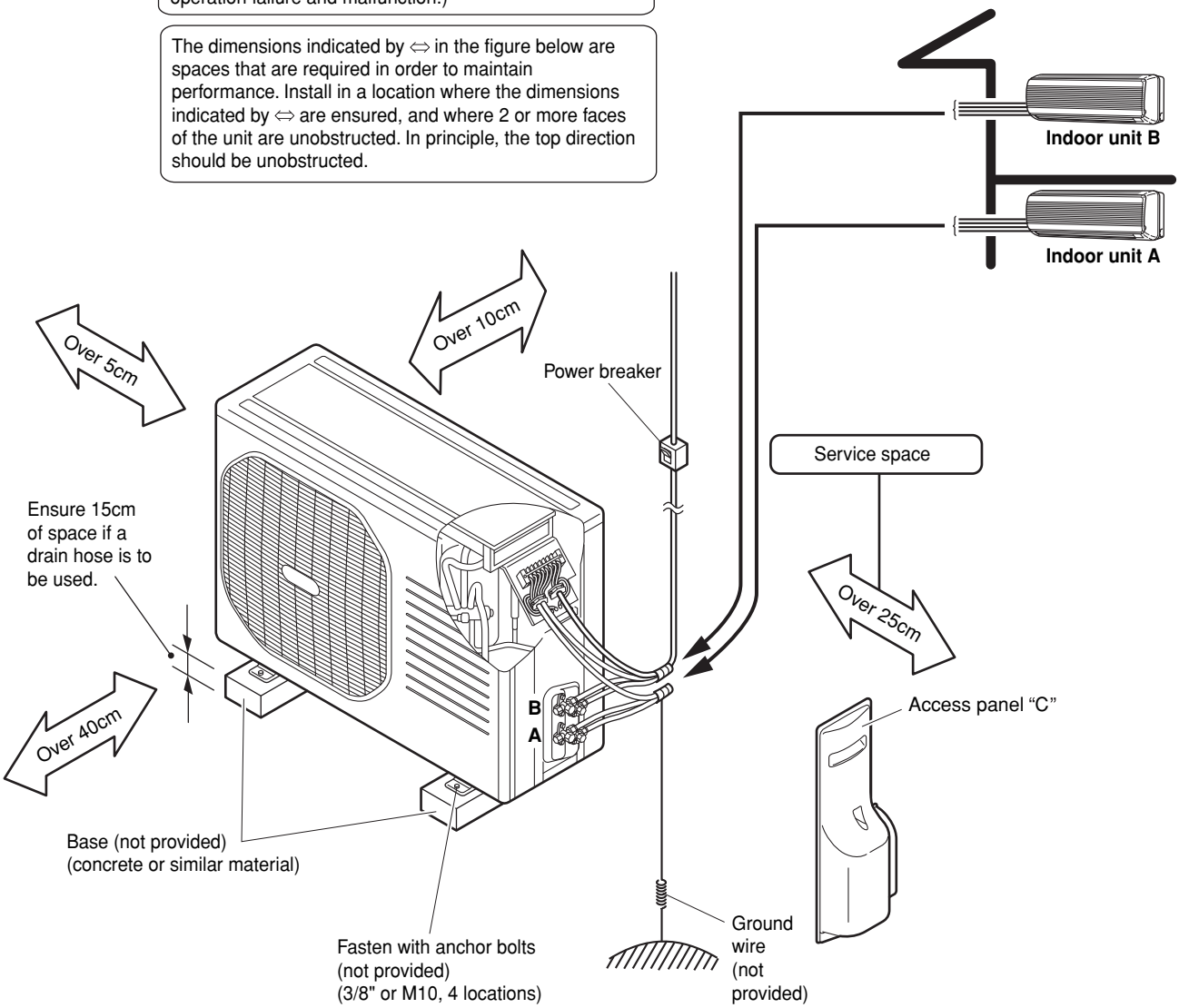

Fig. 6b

English

English

3. Installation Process

3-1. Embedding the Tubing and Wiring

- Do not connect tubes to locations that are embedded.
- Be sure to bind refrigerant tubing and inter-unit cables together with vinyl tape.
- The power cable must be obtained on-site. (ø3.5: Less than 26 m)
- Be sure to apply the provided labels to both ends of the inter-unit cables to prevent miswiring.
- Securely seal the end of embedded tubing with vinyl tape in order to prevent dirt or moisture entry.
- In order to prevent insulation breakdown and ground faults, do not allow the wire ends to contact rainwater, or be subject to dew condensation.

3-2. Drain Cap and Drain Elbow

First refer to Section 2. Installation Site Selection.

NOTE

The drain hole at the bottom of the outdoor unit was not plugged at the time of factory shipment. If necessary, plug the drain hole with the accessory drain cap or mount the accessory drain elbow before installing the outdoor unit. (Fig. 7)

CAUTION **When installing in a cold area where drainage water may freeze, do not attach the provided drain cap or drain elbow to the bottom plate of the unit.**

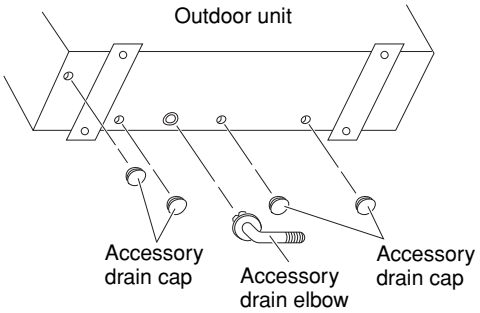

Fig. 7

3-3. Use of the Flaring Method

Many of the conventional split system air conditioners employ the flaring method to connect refrigerant tubes which run between indoor and outdoor units. In this method, the copper tubes are flared at each end and connected with flare nuts.

3-4. Flaring Procedure with a Flare Tool

(1) Cut the copper tube to the required length with a tube cutter. It is recommended to cut approx. 30 – 50 cm longer than the tubing length you estimate.

(2) Remove burrs at the end of the copper tube with a tube reamer or file. This process is important and should be done carefully to make a good flare. (Fig. 8)

Deburring

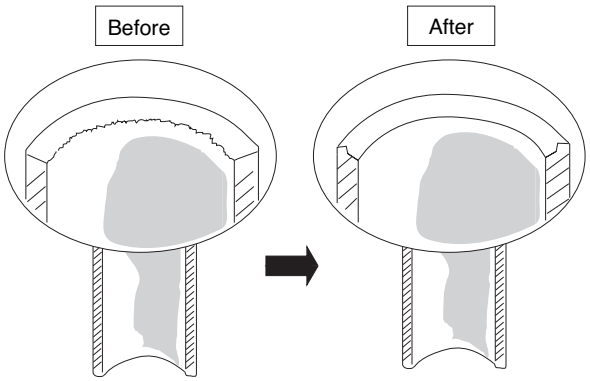

Fig. 8

NOTE

When reaming, hold the tube end downward and be sure that no copper scraps fall into the tube. (Fig. 9)

(3) Remove the flare nut from the unit and be sure to mount it on the copper tube.

(4) Make a flare at the end of copper tube with a flare tool.* (Figs. 10 and 11)

(*Use “RIDGID” or equivalent.)

NOTE

A good flare should have the following characteristics:

- inside surface is glossy and smooth.
- edge is smooth.
- tapered sides are of uniform length.

3-5. Caution Before Connecting Tubes Tightly

a) Be sure to apply a sealing cap or water-proof tape to prevent dust or water from getting into the tubes before they are used.

b) Be sure to apply refrigerant lubricant to the matching surfaces of the flare and union before connecting them together. This is effective for reducing gas leaks. (Fig. 12)

c) For proper connection, align the union tube and flare tube straight with each other, then screw in the flare nut lightly at first to obtain a smooth match. (Fig. 13)

3-6. Tubing Connections

a) Temporary connection:
Screw in 3 – 5 rotations by hand. (Fig.14)

b) To fasten the flare nuts, apply specified torque as:

Table 4

Tube Dia.	Tightening Torque
6.35 mm	14 – 18 N·m (140 – 180 kgf · cm)
9.52 mm	34 – 42 N·m (340 – 420 kgf · cm)
12.70 mm	49 – 61 N·m (490 – 610 kgf · cm)
15.88 mm	68 – 82 N·m (680 – 820 kgf · cm)

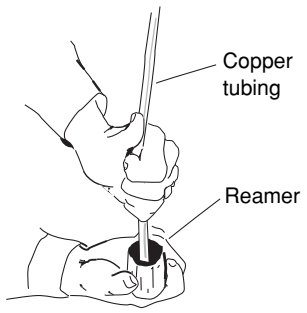

Fig. 9

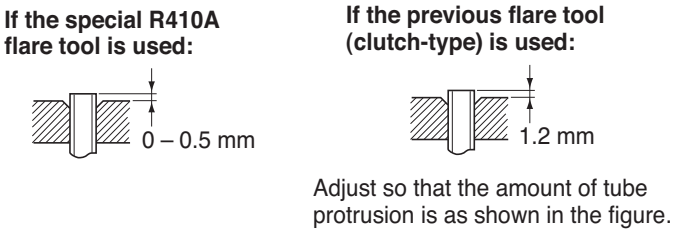

Fig. 10

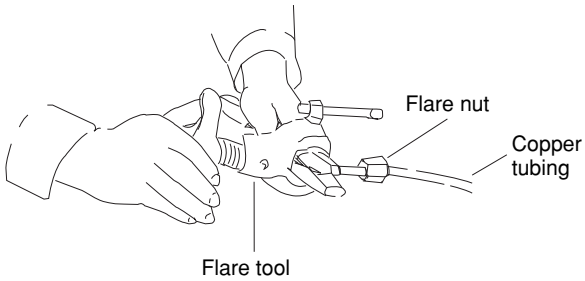

Fig. 11

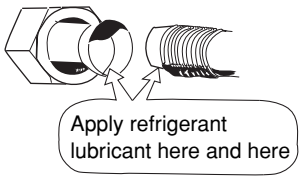

Fig. 12

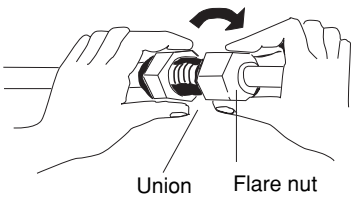

Fig. 13

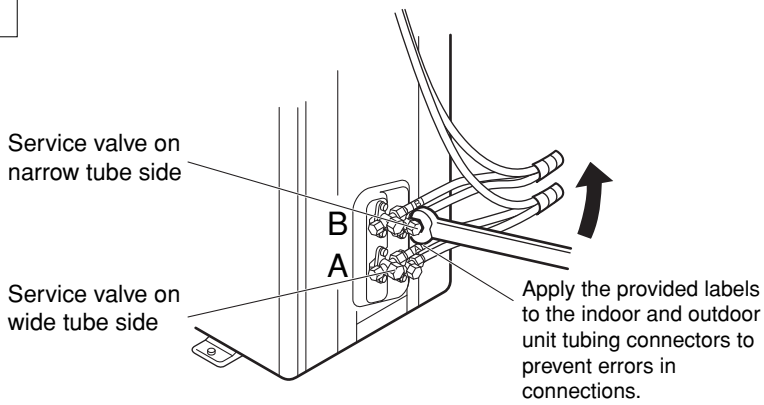

Fig. 14

CAUTION **Be sure to match refrigerant tubing and electric wiring between indoor and outdoor units.**

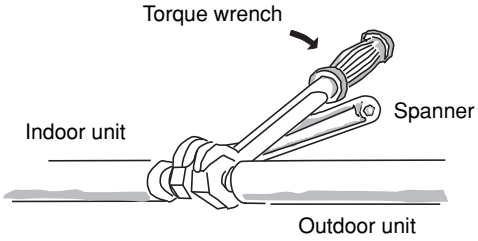

Fig. 15

3-7. Insulation of Refrigerant Tubing

IMPORTANT

To prevent heat loss and wet floors due to dripping of condensation, **both tubes must be well insulated with a proper insulation material.**
The thickness of the insulation should be a minimum 8 mm. (Fig. 17)

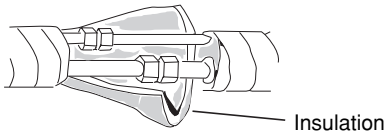

Fig. 16

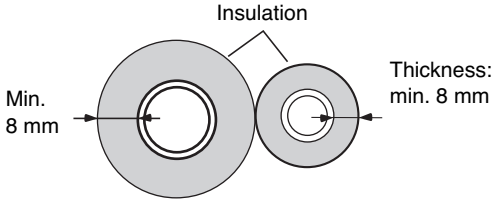

Fig. 17

3-8. Taping the Tubes

CAUTION **After a tube has been insulated, never try to bend it into a narrow curve, as this may cause the tube to break or crack.**

(1) At this time, the 2 refrigerant tubes (and electrical wire if local codes permit) should be taped together with armoring tape. The drain hose may also be included and taped together as 1 bundle with the tubing.

(2) Wrap the armoring tape from the bottom of the outdoor unit to the top of the tubing where it enters the wall. As you wrap the tubing, overlap half of each previous tape turn. (Fig. 18)

(3) Clamp the tubing bundle to wall, using 1 clamp approx. every 120 cm.

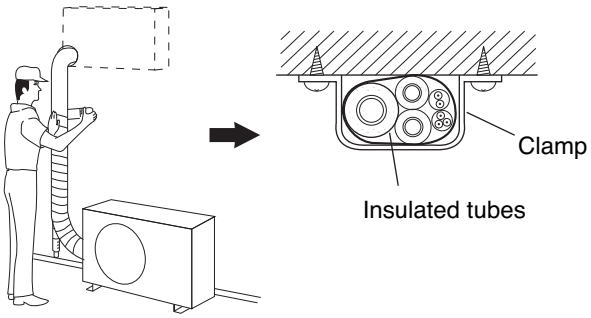

Fig. 18

NOTE

Do not wind the armoring tape too tightly, since this will decrease the heat insulation effect. Also, be sure the condensation drain hose splits away from the bundle and drips clear of the unit and the tubing.

3-9. Finishing the Installation

After finishing insulating and taping over the tubing, use sealing putty to seal off the hole in the wall to prevent rain and draft from entering. (Fig. 19)

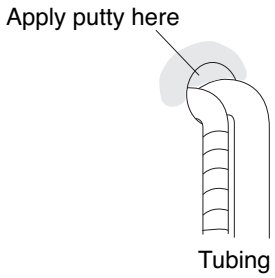

Fig. 19

4. Air Purging

Air and moisture remaining in the refrigerant system have undesirable effects as indicated below. Therefore, they must be purged completely.

- pressure in the system rises
- operating current rises
- cooling efficiency drops
- moisture in the air may freeze and block capillary tubing
- water may lead to corrosion of parts in the refrigerant system

■ Air Purging with a Vacuum Pump (for Test Run)

- In order to protect the earth's environment, be sure to use a vacuum pump to perform the air purge. (Never perform an air purge by using the refrigerant gas cylinder or other external gas, or by using the gas inside the outdoor unit.)
  Perform the air purge for tubes A and B. Use the same procedures for all tubes.

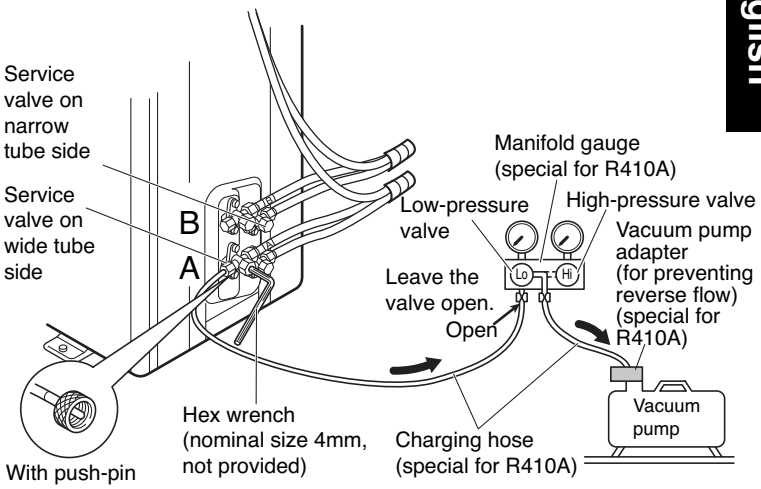

Fig. 20

CAUTION

In order to prevent charging errors with the air conditioner that uses R410A, the screw diameter at the service valve charging port has been changed. When recharging or performing other servicing, use the special charging hose and manifold gauge.

(1) Check that each tube (both narrow and wide tubes) between the indoor and outdoor units have been properly connected and all wiring for the test run has been completed. Note that both narrow and wide tube service valves on the outdoor unit are kept closed at this stage.

(2) Using an adjustable wrench or box wrench, remove the valve caps from the service valve on both narrow and wide tubes.

(3) Connect a vacuum pump and a manifold valve (with pressure gauges) to the service port on the wide tube service valve. (Fig. 20).

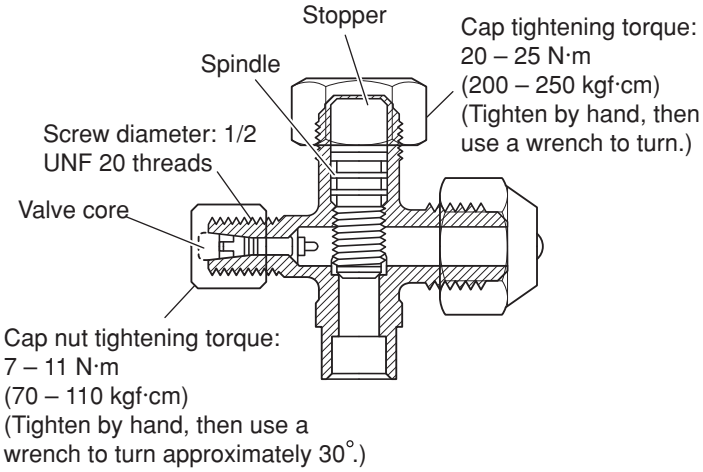

<Structure of service valve on wide tube side>

Fig. 21

CAUTION

Before using the vacuum pump adapter, read the vacuum pump adapter manual, and use the adapter correctly.

CAUTION

Be sure to use a manifold valve for air purging. If it is not available, use a stop valve for this purpose. The "Hi" knob of the manifold valve must always be kept closed.

- When using a hex wrench to open the spindle, an extremely small amount of refrigerant may leak. This does not indicate a problem.
- Use a hex wrench of a type to which force can be easily applied.

(4) With the “Lo” knob of the manifold valve open and high-pressure valve (“Hi”) closed completely, run the vacuum pump. Run the pump until the pressure is –101 kPa (–76 cmHg). The operation time for the vacuum pump varies with tubing length and the capacity of the pump. The following table shows the amount of time required for evacuation:

Table 5

Required time for evacuation when capacity of 100 liter/h vacuum pump is used
20 min. or more

NOTE

The required time in the above table is calculated based on the assumption that the ideal (or target) vacuum condition is around 10 mmHg abs.

(5) With the vacuum pump still running, close the “Lo” knob of the manifold valve. Then stop the vacuum pump. Fully close the low-pressure valve and stop the vacuum pump. (Wait 1 – 2 minutes and check that the manifold gauge pointer does not return. If it does return, find and repair the leak, then apply the vacuum again.)

(6) With a hex wrench, turn the valve stem on the narrow tube service valve counter-clockwise by 90 degrees (1/4 turn) for 10 seconds, and then turn the stem clockwise to close it again.

CAUTION **Be sure to completely insert the hex wrench before attempting to turn the valve.**

(7) With a standard screwdriver, turn the wide tube service valve stem counterclockwise to fully open the valve.

(8) Turn the narrow tube service valve stem counterclockwise to fully open the valve.

(9) Loosen the vacuum hose connected to the wide tube service port slightly to release the pressure. Then, remove the hose.

(10) Leak test all joints at the tubing (both indoor and outdoors) with liquid soap. Bubbles indicate a leak. Be sure to wipe off the soap with a clean cloth.

CAUTION **If a CFC gas detector is used, use a special detector for HFC refrigerant (such as R410A and R134a).**

(11) Replace the flare nut on the wide tube service port and fasten the flare nut securely with an adjustable wrench or box wrench. Next, mount the valve cap and tighten it with a torque wrench (the cap needs to be tightened with the torque of 20 N·m (200 kgf · cm)). This process is very important to prevent gas from leaking from the system.

(12) Test run the air conditioner. (See page 18.)

(13) While the air conditioner is running, apply liquid soap to check for any gas leaks around the service valves or caps.

(14) If there is no leakage, stop the air conditioner.

(15) Wipe off the soap on the tubing.

This completes air purging with a vacuum pump and the air conditioner is ready for actual operation.

English

■ Pump Down

In order to protect the earth's environment, be sure to perform pump-down to recover refrigerant gas without releasing it into the atmosphere.

- When relocating or disposing of the Air Conditioner, request this service from the dealer where the unit was purchased, or from an appropriate agent. Perform pump-down as described below.

What is pump-down?

- Pump-down refers to recovering the refrigerant gas from the refrigerant cycle at the outdoor unit. This work must be performed during cooling operation. The refrigerant gas cannot be recovered during heating operation.
- During winter, or if the temperature sensor prevents cooling operation, perform "forced cooling operation."

Pump-down procedure

(1) Fully close the spindles at the valves on the narrow tube side of tubes A and B. (Refer to Fig. 22.)

(2) Connect the manifold gauge to the charging port at the valve on the wide tube side of tube B. Purge the air from the charging hose. (Refer to Fig. 23.)

(3) Perform cooling operation or forced cooling operation. When the pressure at the low-pressure side is 0.15 – 0.2 MPa (0.5 – 1 kg/cm^{2}G), fully close the spindles at the valves on the wide tube side of tubes A and B, and immediately stop operation. (Refer to Fig. 23.)
In the winter, the outdoor unit may stop after 5 – 10 minutes of operation. This is in order to protect the indoor unit heat exchanger from freezing and does not indicate a problem.

(4) Disconnect the manifold gauge and the inter-unit tubes, and attach the caps and flare nuts. At this point, pump-down is completed. (If the caps and flare nuts are not reattached, there is the danger of gas leakage.) (Refer to Fig. 24.)

If pump-down is not possible

If the Air Conditioner cannot be operated because of a malfunction or other cause, use a refrigerant recovery device to recover the refrigerant.

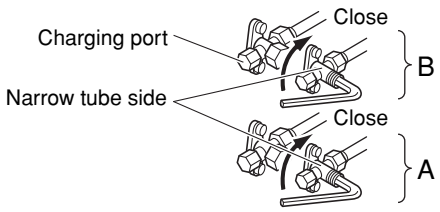

Fig. 22

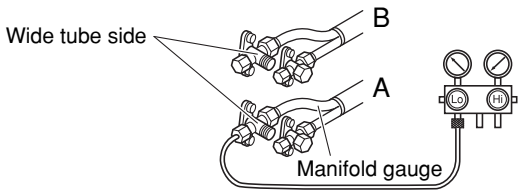

Fig. 23

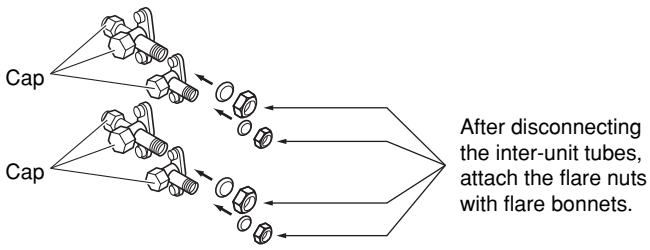

Fig. 24

English

5. Wiring Instructions

5-1. General Precautions on Wiring

(1) Before wiring, confirm the rated voltage of the unit as shown on its nameplate, then carry out the wiring closely following the wiring diagram.

(2) Provide a power outlet to be used exclusively for each unit, with a power supply disconnect and circuit breaker for overcurrent protection provided in the exclusive line.

(3) To prevent possible hazard due to insulation failure, the unit must be grounded.

(4) Each wiring connection must be done tightly and in accordance with the wiring system diagram. Wrong wiring may cause the unit to misoperate or become damaged.

(5) Do not allow wiring to touch the refrigerant tubing, compressor, or any moving parts of the fan.

(6) Unauthorized changes in the internal wiring can be very dangerous. The manufacturer will accept no responsibility for any damage or misoperation that occurs as a result of such unauthorized changes.

5-2. Recommended Wire Length and Diameter

Regulations on wiring diameter differ from locality to locality. For field wiring requirements, please refer to your local electrical codes. Carefully observe these regulations when carrying out the installation.
Table 6 shows maximum wire lengths for control line and power line and fuse or circuit capacity.

NOTE

Refer to the wiring system diagram (Fig. 25) for the meaning of (A), (B), and (C) in Table 6.

Table 6

Cross-Sectional Area (mm^2) / Model	Max. Power Line Length (m) (A)	Max. Control Line Length (m) (B) (C)	Fuse or Circuit Capacity
	3.5	1.0	
SAP-CMRV1426	26	25	15 A

WARNING

- **Be sure to comply with local codes on running the wire from the indoor unit to the outdoor unit (size of wire and wiring method, etc.).**
- **Each wire must be firmly connected.**
- **No wire should be allowed to touch refrigerant tubing, the compressor, or any moving part.**
- **Be sure to connect power wires correctly matching up numbers on terminals of the outdoor unit and respective indoor units A – B.**

CAUTION

- **Be sure to connect the power supply line to the outdoor unit as shown in the wiring diagram. The indoor unit draws its power from the outdoor unit.**
- **Do not run wiring for antenna, signal, or power lines of television, radio, stereo, telephone, security system, or intercom any closer than 1 meter from the power cable and wires between the indoor and outdoor units. Electrical noise may affect the operation.**

WARNING

- **To avoid the risk of electric shock, each air conditioner unit must be grounded.**
- **For the installation of a grounding device, please observe local electrical codes.**
- **Grounding is necessary, especially for units using inverter circuits, in order to release charged electricity and electrical noise caused by high tension. Otherwise, electrical shock may occur.**
- **Place a dedicated ground more than 2 meters away from other grounds and do not have it shared with other electric appliances.**

English

5-3. Wiring System Diagram

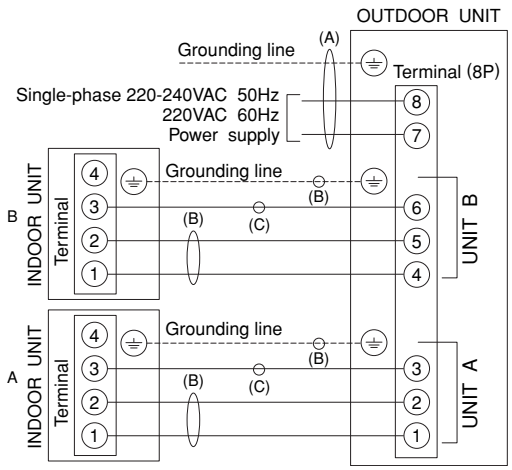

Fig. 25

5-4. How to Connect Wiring to the Terminal

WARNING **Loose wiring may cause the terminal to overheat or result in unit malfunction. A fire hazard may also exist. Therefore, be sure all wiring is tightly connected.**

When connecting each power wire to the corresponding terminal, follow the instructions “How to connect wiring to the terminal” and fasten the wire securely tight with the fixing screw of the terminal plate.

How to connect wiring to the terminal

a) For Indoor Unit

(1) Cut the wire end with a cutting pliers, then strip the insulation to expose the wire about 7 mm. See the label (Fig. 26) near the terminal plate.

(2) Using a screwdriver, loosen the terminal screw on the terminal plate.

(3) Insert the wire and tighten the terminal screw completely using a screwdriver.

b) For Outdoor Unit

■ For solid core wiring (or F-cable)

(1) Cut the wire end with a cutting pliers, then strip the insulation to expose the solid wire about 25 mm. (Fig. 27)

(2) Using a screwdriver, remove the terminal screw(s) on the terminal plate.

(3) Using the pliers, bend the solid wire to form a loop suitable for the terminal screw.

(4) Shape the loop wire properly, place it on the terminal plate and fix it securely with the removed terminal screw using a screwdriver.

■ For stranded wiring

(1) Cut the wire end with a cutting pliers, then strip the insulation to expose the stranded wiring about 10 mm and tightly twist the wire ends. (Figs. 28 and 29)

(2) Using a screwdriver, remove the terminal screw(s) on the terminal plate.

(3) Using a ring connector fastener or pliers, securely clamp each stripped wire end with a ring connector. (Fig. 28)

(4) Place the ring connector wire, and replace and tighten the removed terminal screw using a screwdriver. (Fig. 30)

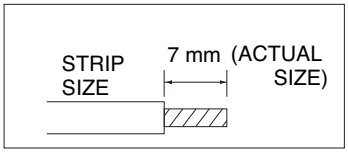

Fig. 26

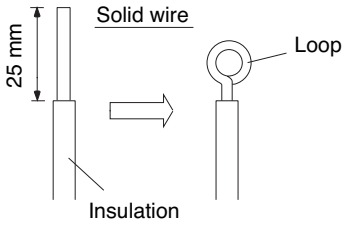

Fig. 27

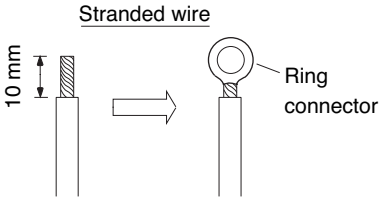

Fig. 28

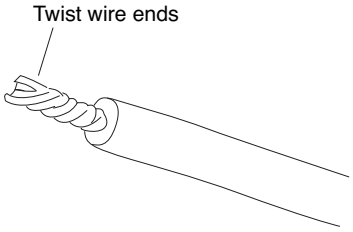

Fig. 29

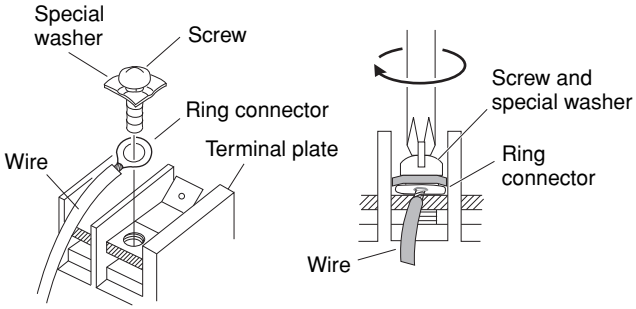

Fig. 30

5-5. Wiring Instructions for the Outdoor Unit

CAUTION

- Be sure to correctly align inter-unit cables A and B.

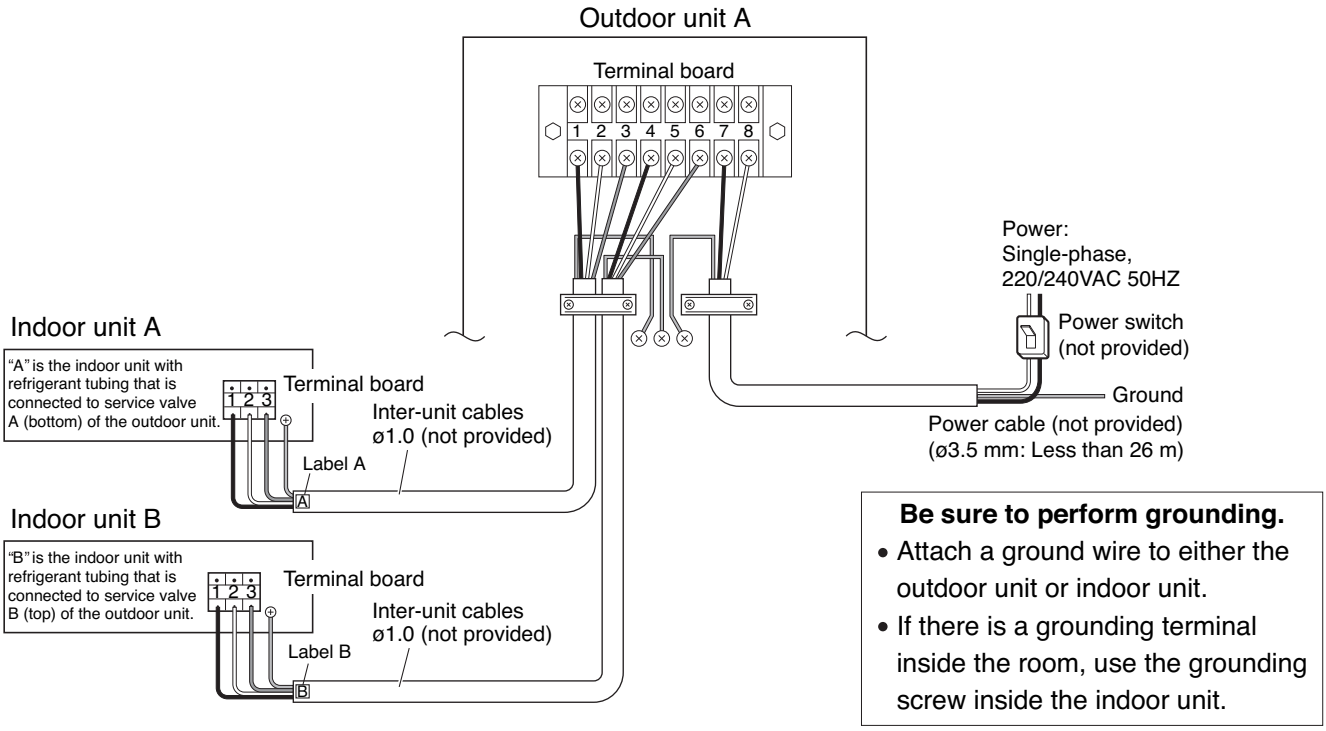

Be sure to perform grounding.

- Attach a ground wire to either the outdoor unit or indoor unit.
- If there is a grounding terminal inside the room, use the grounding screw inside the indoor unit.

- Be sure to apply the provided labels to both ends of the inter-unit cables to prevent mis-wiring. The units will not function if the wiring connections are incorrect.

Fig. 31

- Use a dedicated air conditioner circuit for power.
- To make connections to the outdoor unit, remove the inspection panel and tubing panel.
- Do not bring the inter-unit cables or power cable into contact with tubing or service valves.
- Use outdoor unit cable fasteners and fasten the inter-unit cables at the location where the cables are double-sheathed.
- Arrange the wiring so that the inter-unit cables are contained in the inspection panel and tubing panel, as shown in Fig. 31.

Regulations on wire size differ from locality to locality. For field wiring requirements, please refer to your local electrical codes. Make sure that the installation fully complies with all local and national regulations.

(1) Remove access panel “C”. (Fig. 32)

(2) Connect the inter-unit wiring and power line according to the drawing on the panel side.

(3) Be sure to size each wire allowing approx. 10 cm longer than the required length for wiring. Store excess wiring inside the cabinet.

(4) When connections are completed, check that all connections are correct as shown in the wiring system diagram on panel side.

(5) Be sure to ground the unit according to your local codes.

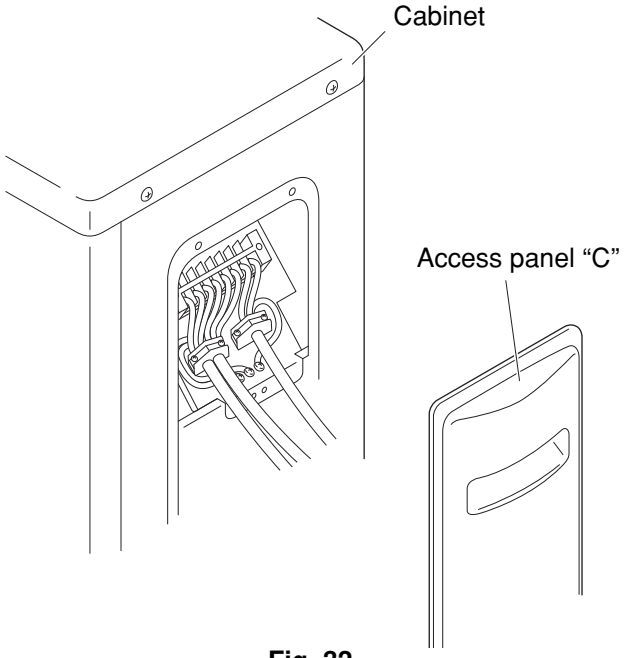

Fig. 32

6. Test Run

Performing a test run

- Refer to the test run procedures in the indoor unit installation manual.
- Perform the test run separately for each connected indoor unit. If 2 units are operated simultaneously, it is not possible to correctly check for errors in tubing and wiring.
- If the room temperature is 15°C or below, it may not be possible to check for tubing errors with cooling operation. If this occurs, perform heating operation for each unit individually, and check that warm air is discharged from each unit. If there is cold air mixed in with the warm air, check the tubing connections again.

Checking tubing and wiring

Perform the test run and check that operation is normal. If there is an error in tubing or wiring, the refrigerant may flow to indoor unit B when indoor unit A is operated (for example).

CAUTION

- Stop operation immediately if there is an error in tubing or wiring. Turn the power (breaker) OFF, and check whether the inter-unit cables are connected incorrectly, or whether the narrow tubes A and B are connected in reverse. Correct the connections.
- If there is an error in tubing, pump-down must be performed. Be sure to perform pump-down. After making corrections, again purge the air from the tubes.

7. Connecting a Home Automation Device

The HA (white) 4P terminal is located on the indoor unit PCB. If a HA device will be used, connect it to this terminal.
Also, refer to Section 9. Electric Wiring Diagram in the outdoor unit installation manual.

8. Installation Check Sheet

- ☐ The strength of the installation location is sufficient to support the Air Conditioner weight.
- ☐ The indoor and outdoor units are installed level and vertically.
- ☐ The power and voltage are as specified.
- ☐ Inter-unit cables are securely fastened to the terminal board.
- ☐ Inter-unit cables are securely fixed.
- ☐ The power cord and inter-unit cables are not connected anywhere along their paths.
- ☐ The ground wire is securely connected.
- ☐ An air purge of the refrigerant circuit has been conducted.
- ☐ A leak test of the tubing connections has been performed.
- ☐ Thermal insulation has been applied to the tubing connections.
- ☐ Drain connections are secure and water drains properly.
- ☐ Putty has been used to close the hole in the wall.
- ☐ All service valves are fully open.
- ☐ Remote controller signals are being positively received.

9. Electric Wiring Diagram

Indoor Unit

SAP-KMRV74/94/124EH

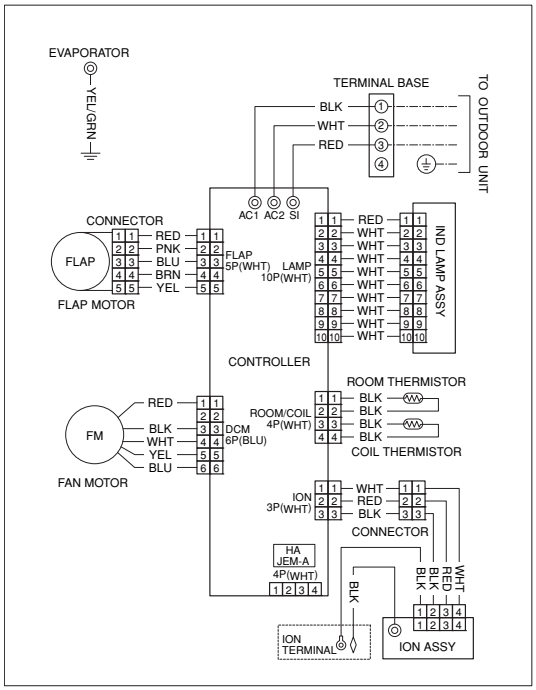

Fig. 33a

8FA-2-5257-72600-1

English

English

SAP-KMRV76/96/126EH

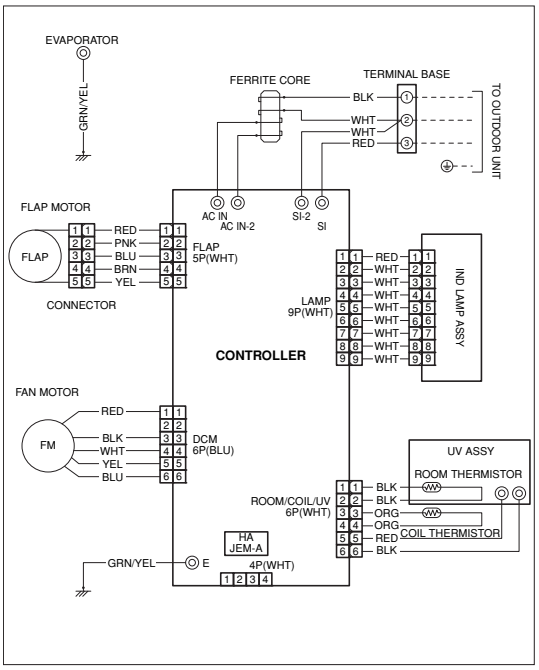

Fig. 33b

8FA-2-5250-29700-2

SAP-KRV96/126EHDS

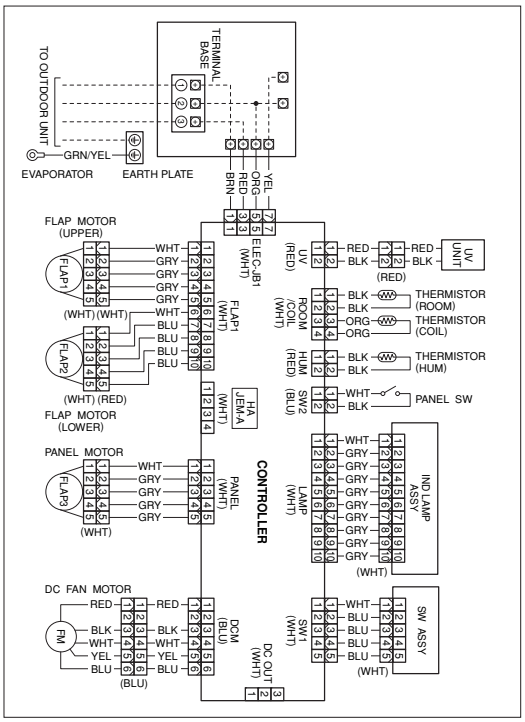

Fig. 33c

8FA-2-5250-07400-1

Electric wiring diagram for 2-room multi outdoor unit (CMRV1426EH)

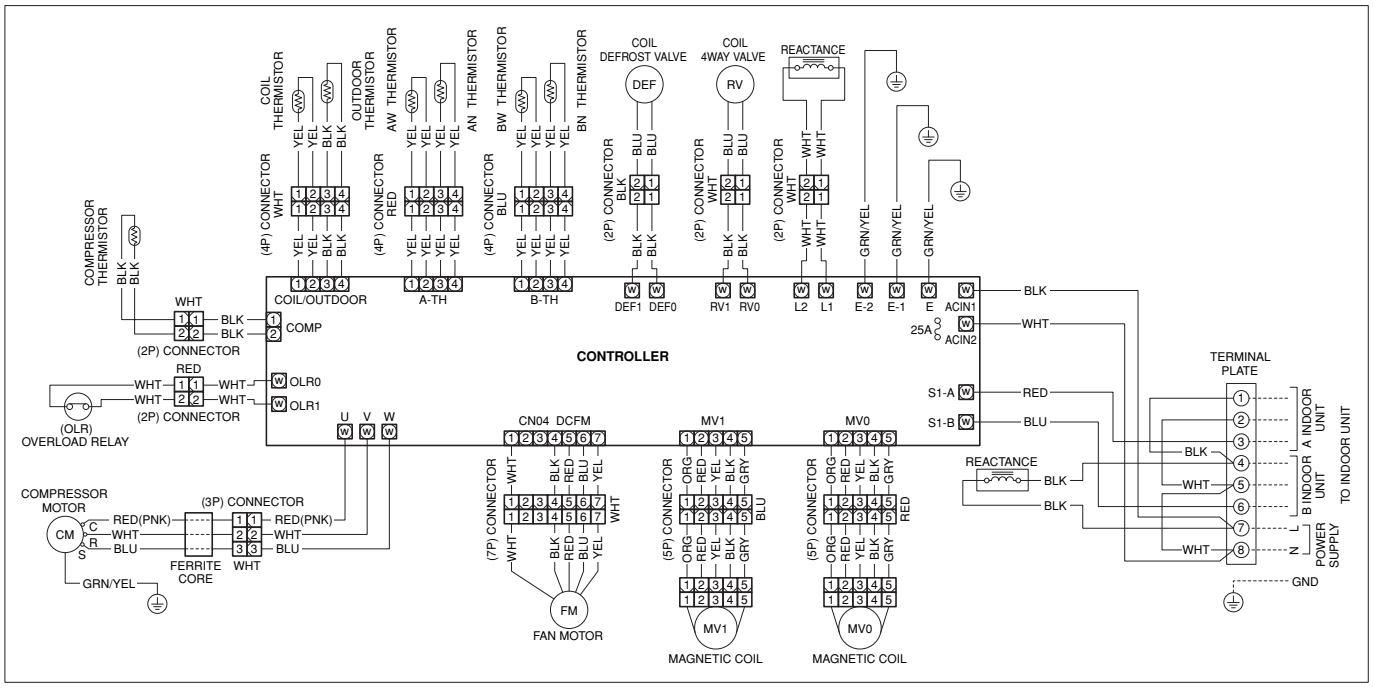

Fig. 34

8FA-2-5257-56900-2

WARNING

To prevent electric shock, do not inspect or repair until the Power Lamp on the P.C.Board is turned off.

Meaning of Abbreviations

	ABBREV.	MEANING
1	BLK	BLACK
2	BLU	BLUE
3	BRN	BROWN
4	GRN/YEL	GREEN/YELLOW
5	GRY	GREY
6	ORG	ORANGE
7	PNK	PINK
8	RED	RED
9	VLT	VIOLET
10	WHT	WHITE
11	YEL	YELLOW